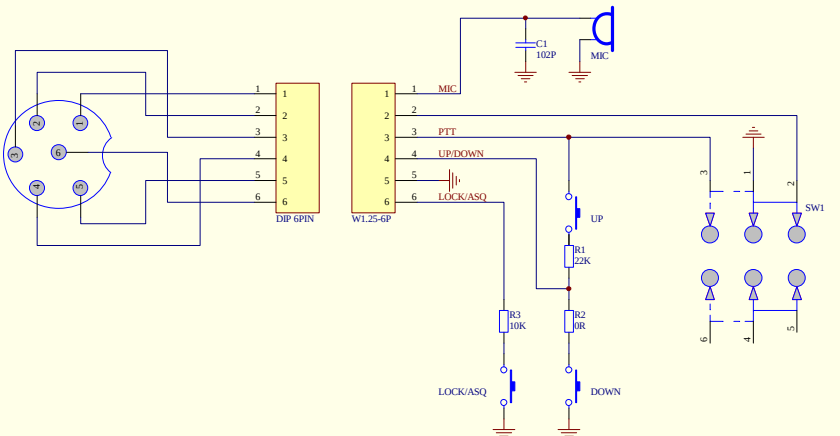

Title		
Size A4	Number	Revision
Date: 21-Jul-2026		Sheet of
File: E:\资料-NEW\办公文档设计文档\pcb\CEDT2026.Pcb		